ICONX

It is highly recommended that you visit
www.metalearth.com/360/icx103
to see the completed model before assembling your own

Metal Earth
3D METAL MODEL KITS

METAL SHEETS

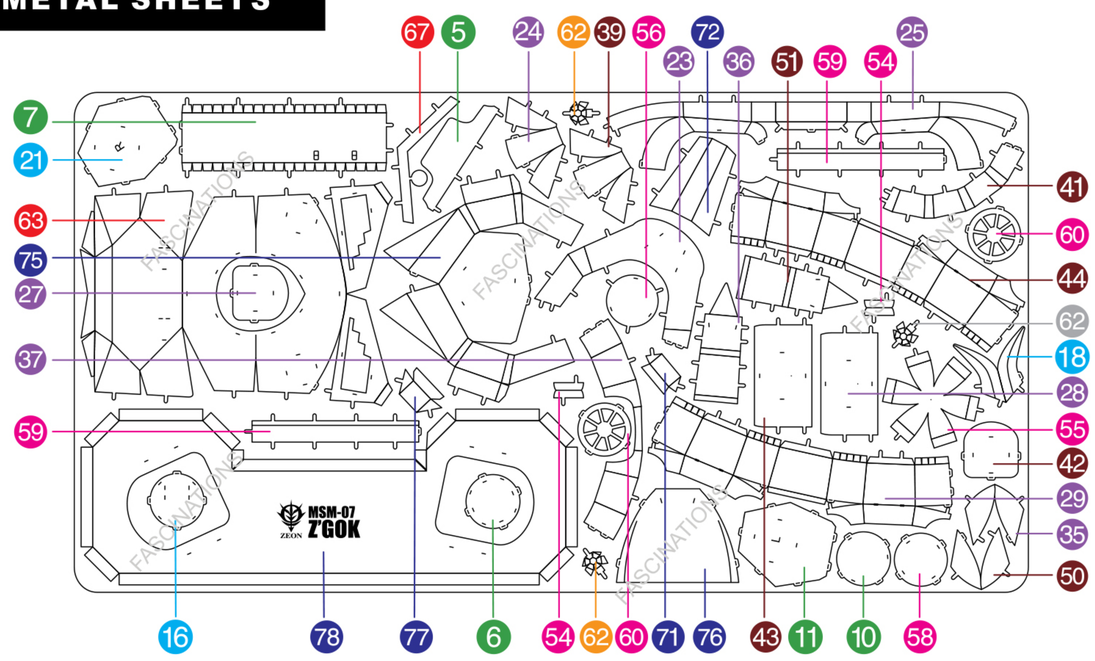

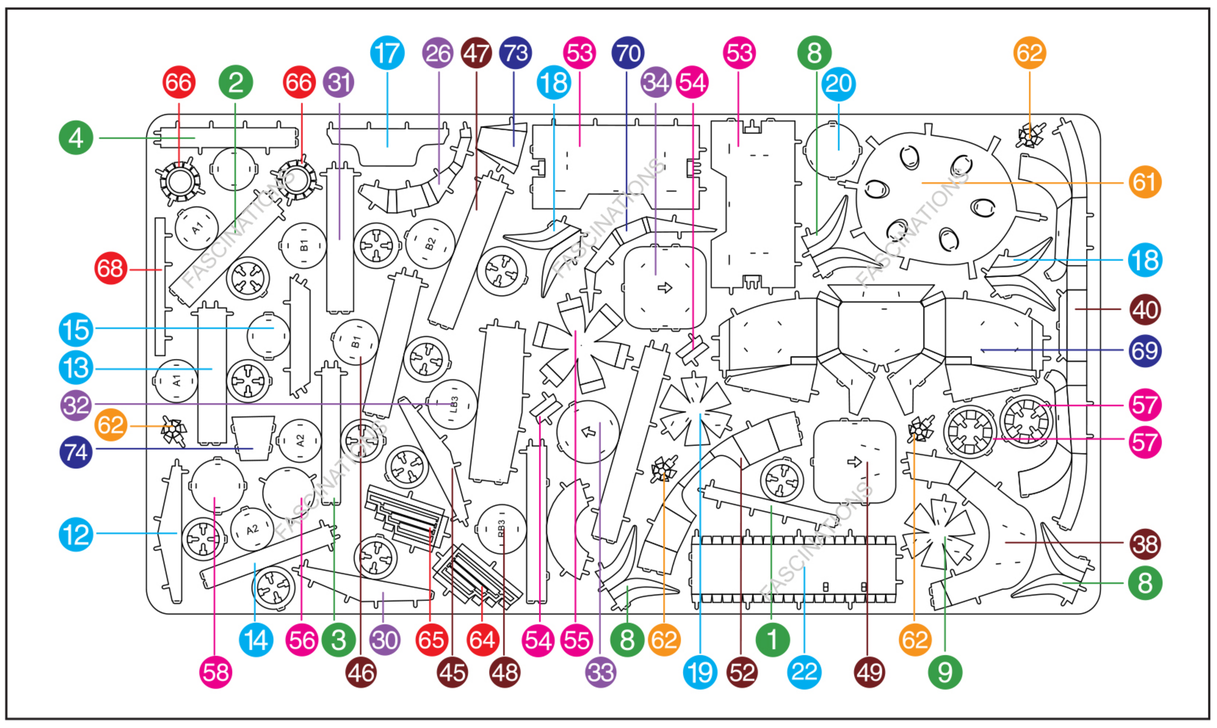

In order to avoid possible injury from sharp edges, please carefully discard the metal sheet after parts have been removed.

Go to www.metalearth.com/360/icx103 to see the zoomable PDF version of this instruction sheet

ICX103 MSM-07 Z'GOK

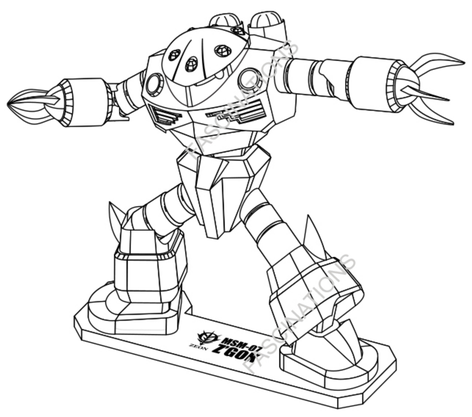

©SOTSU • SUNRISE PLEX 2017 MADE IN CHINA

TO CREATE THE BEST CONNECTIONS

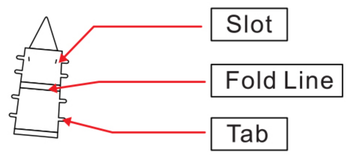

Legends:

- E — Engraved side
- NE — Non-engraved side
- Attention point
- Insert tab and bend 90 degrees
- Insert tab and twist 90 degrees

Assembly tip:

If needed, slightly twist tabs to hold parts together then untwist and bend them down for a nice finish.

Recommended tools:

- Wire cutters: helpful for taking parts from the metal sheets.

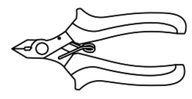

- Tweezers or needle nose pliers: helpful for folding parts, bending and twisting tabs.

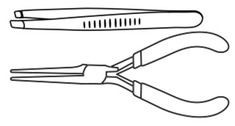

ASSEMBLY STEPS

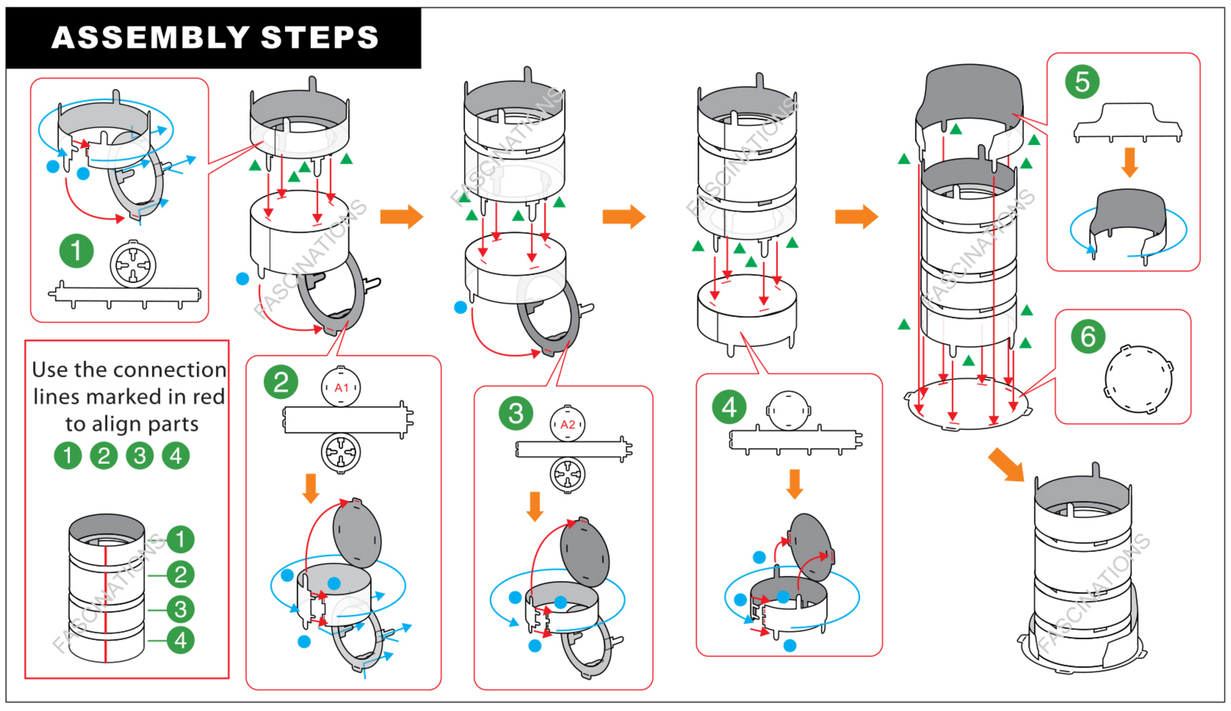

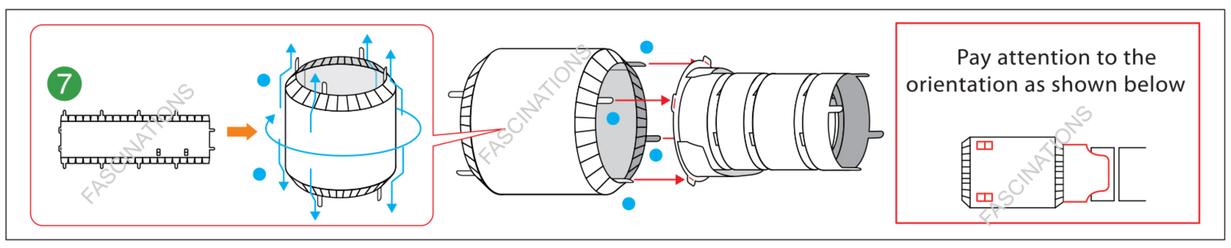

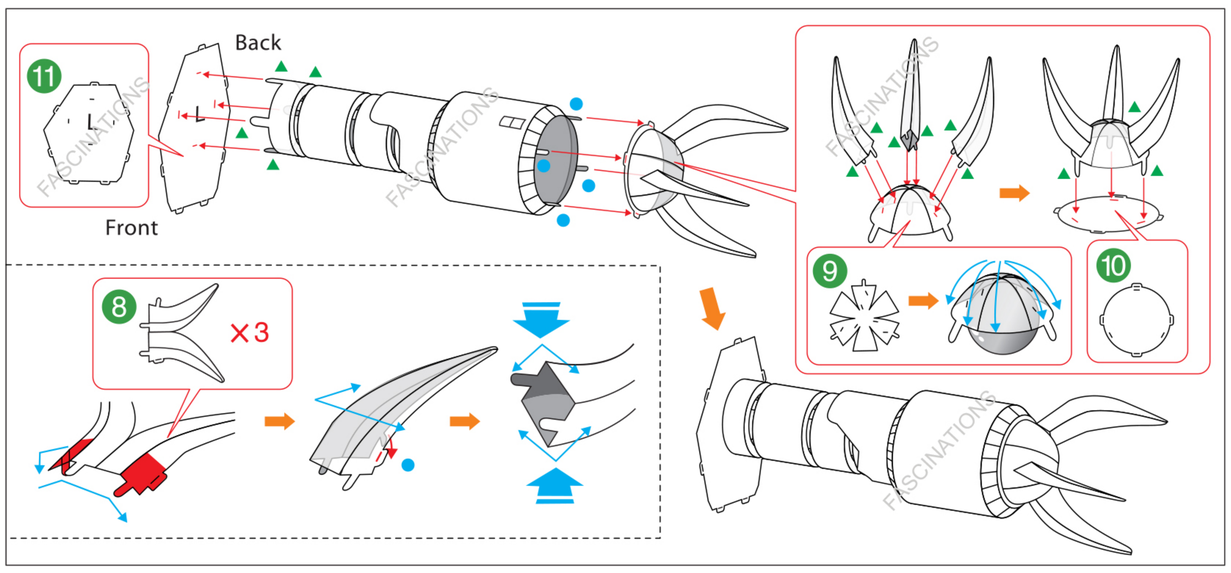

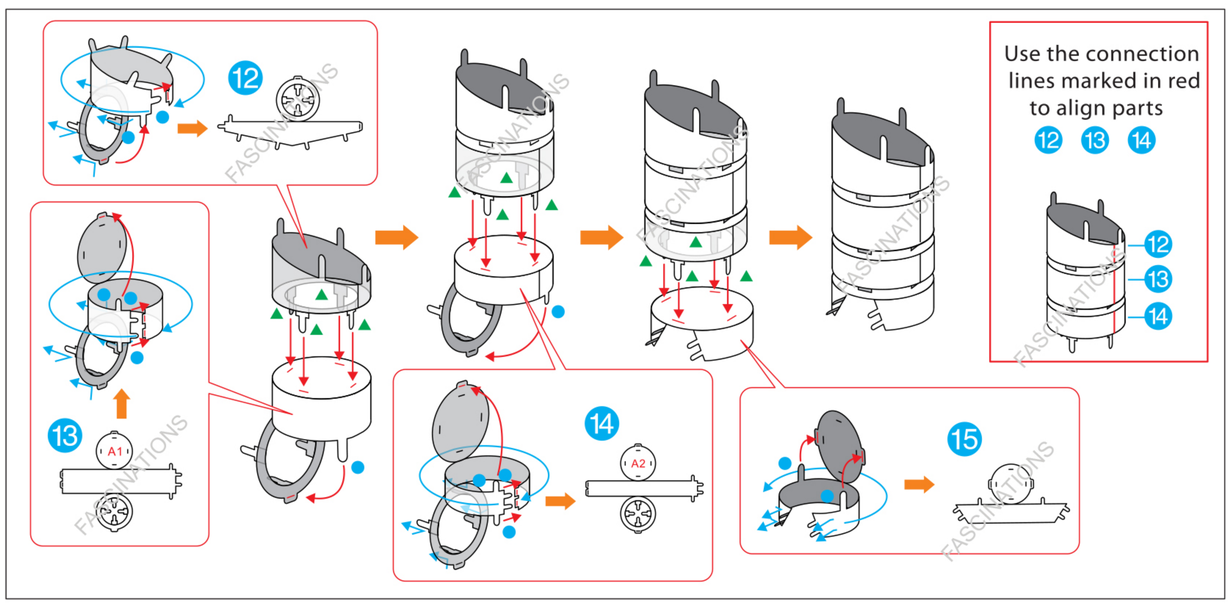

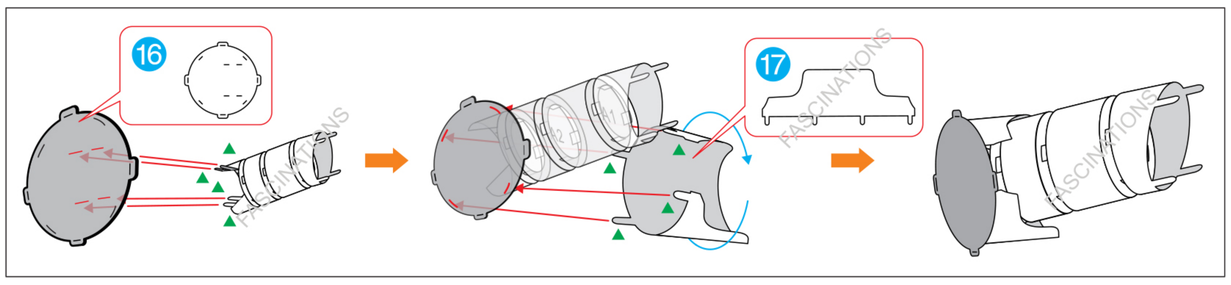

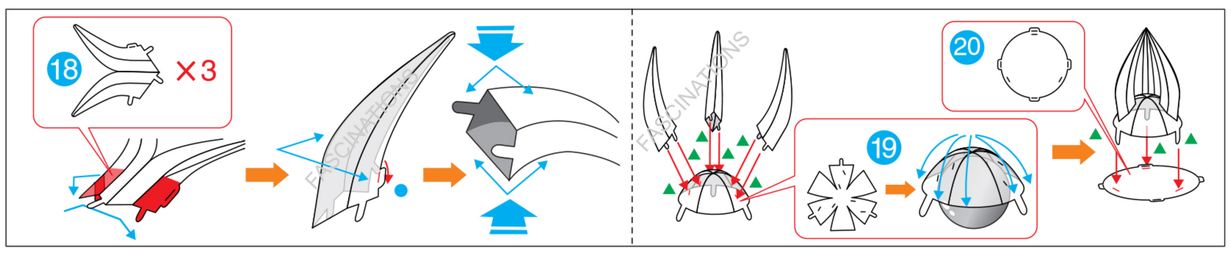

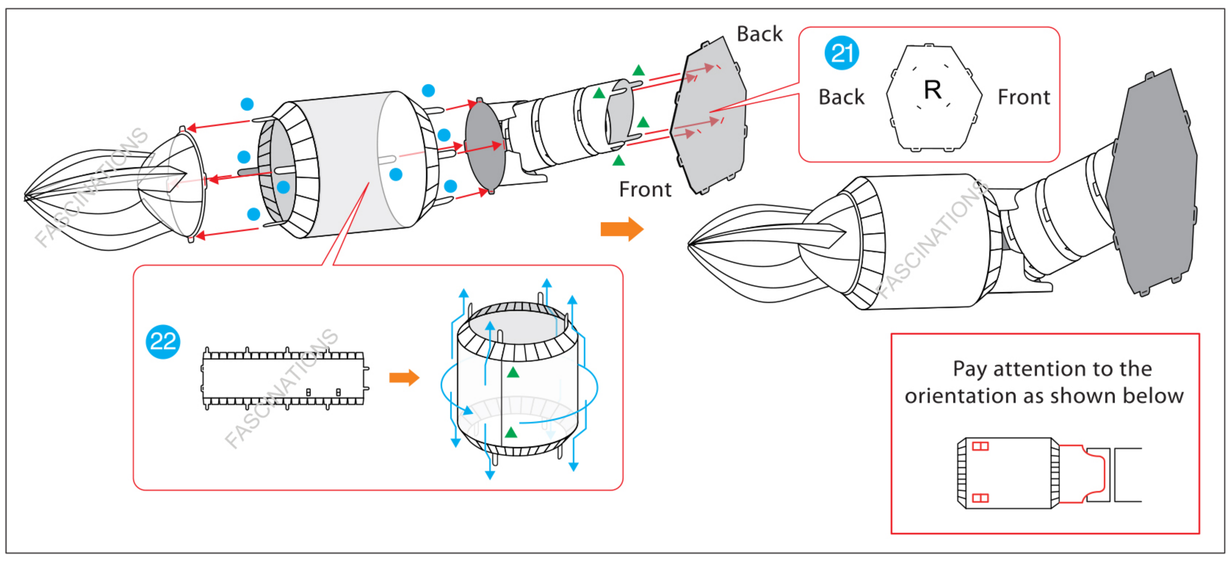

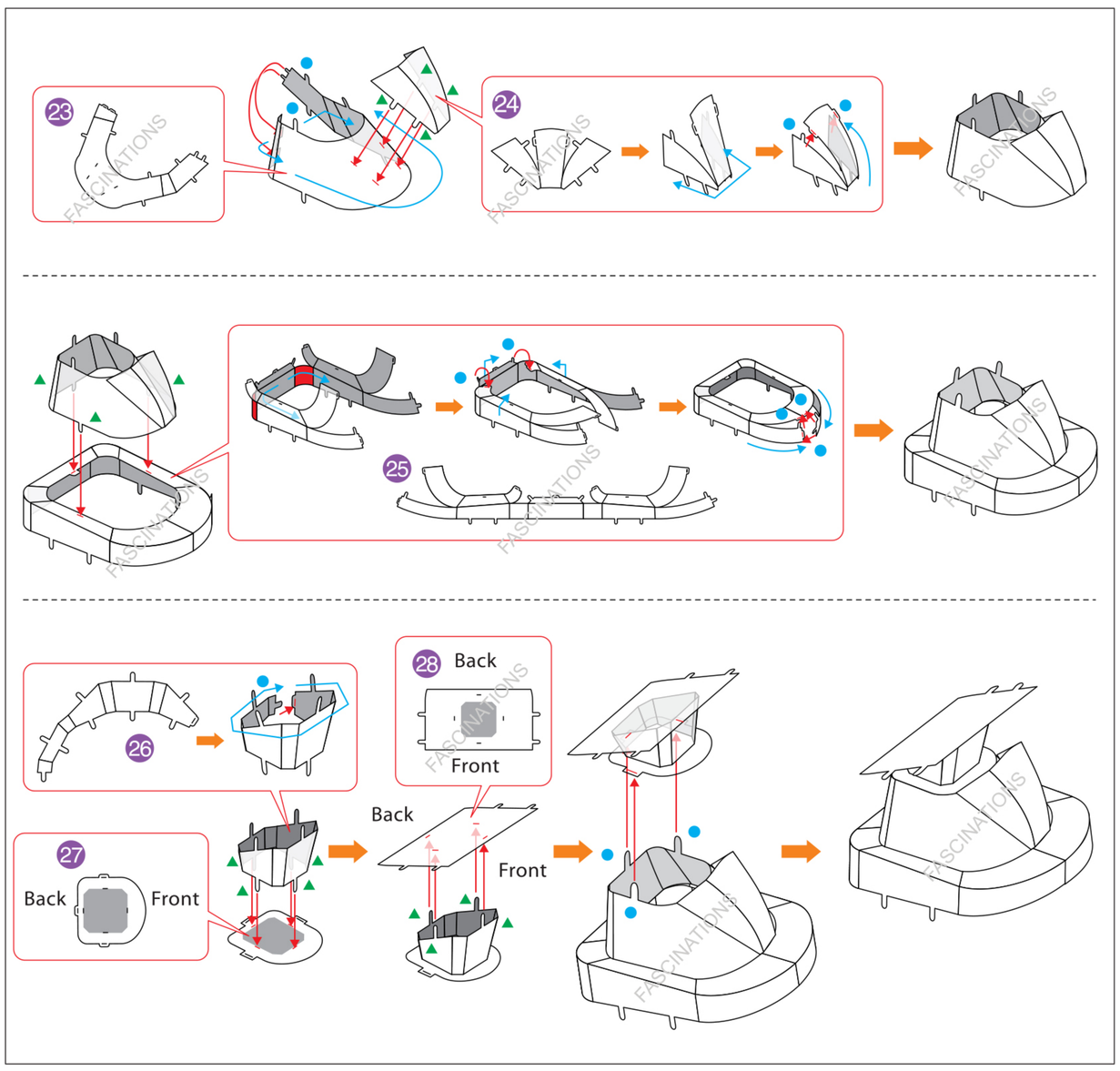

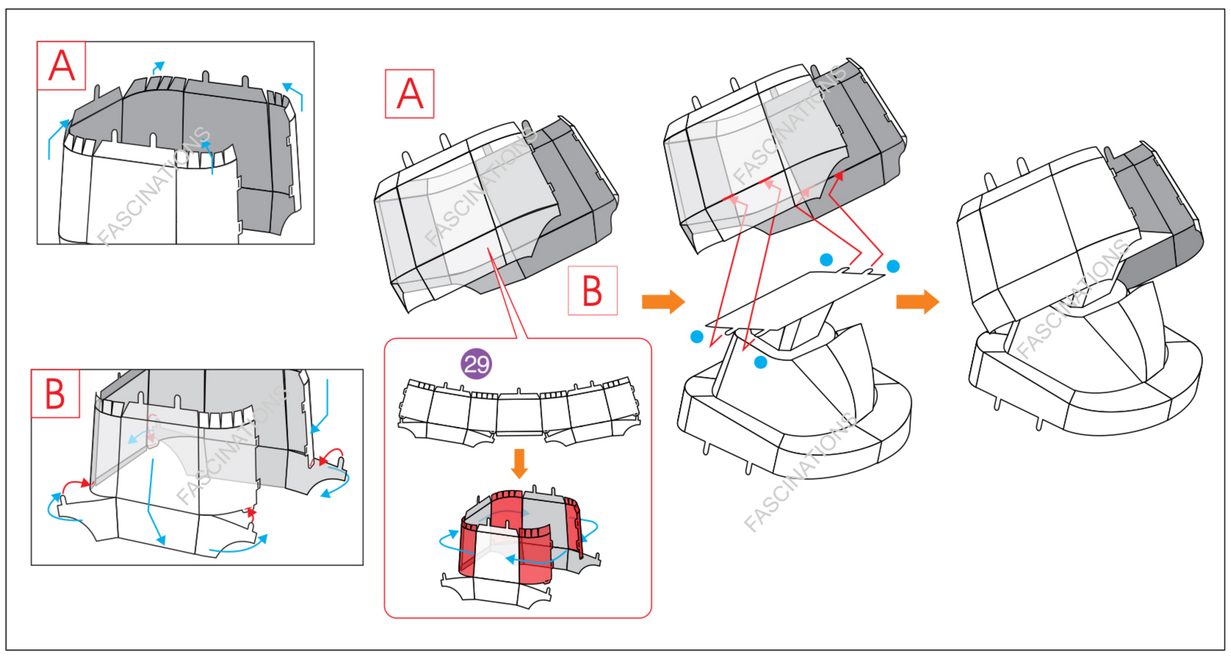
A
B
29

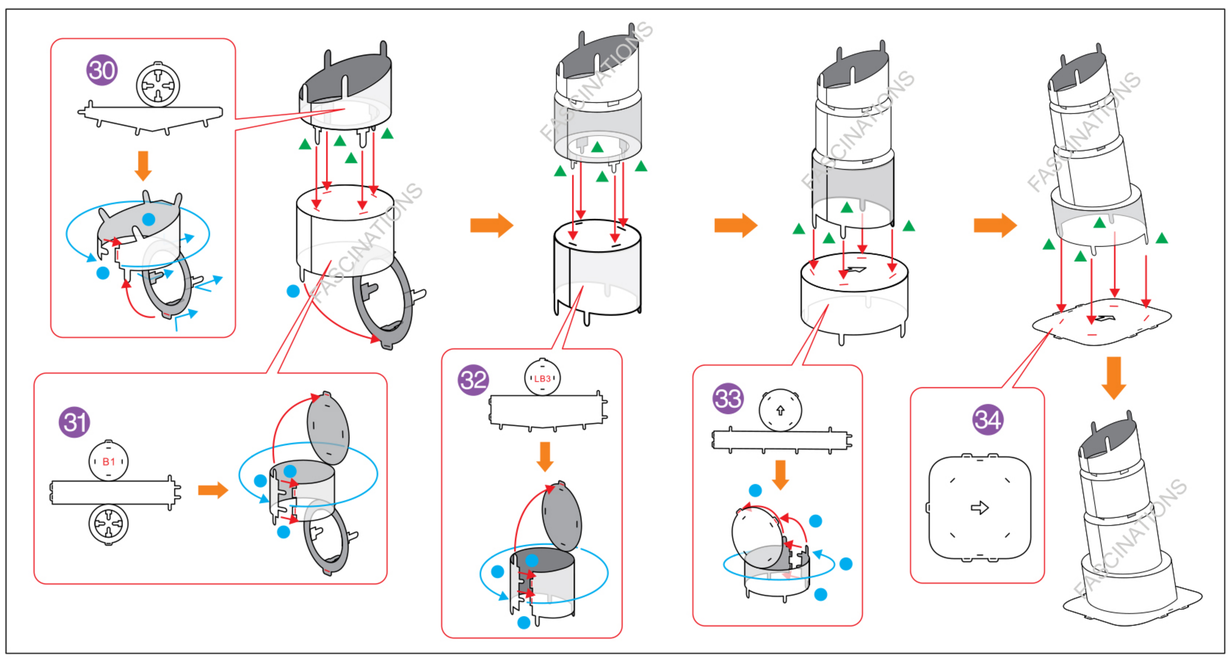
30
31
B1
32
LB3
33
34

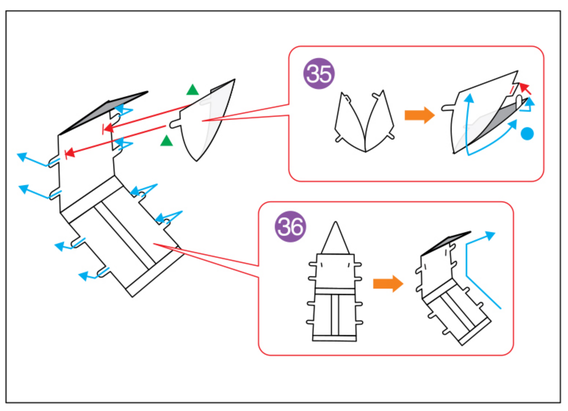
35
36

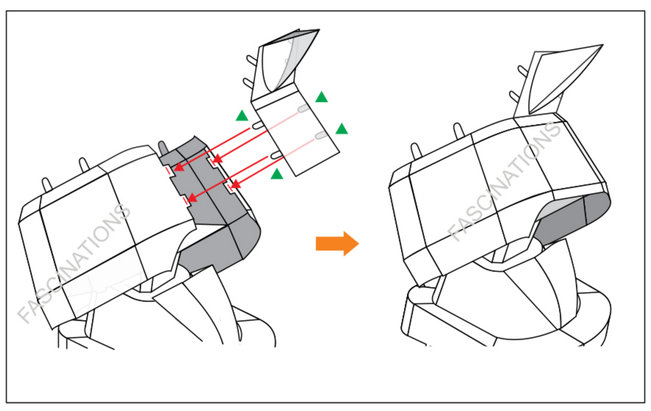

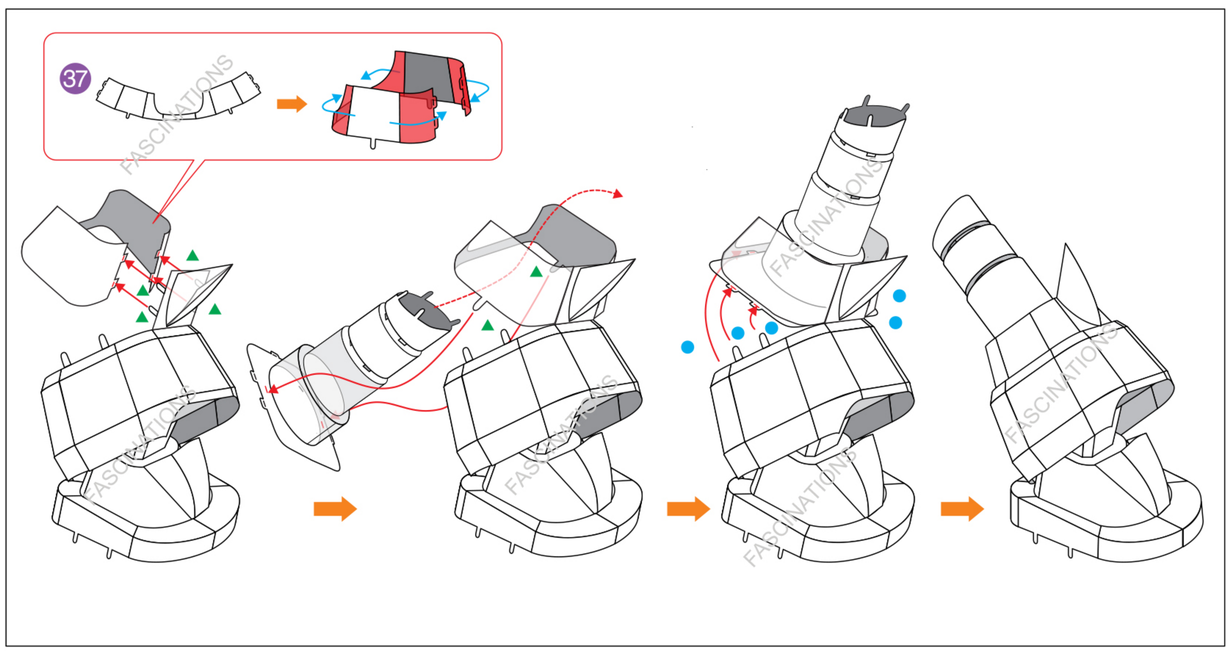
37

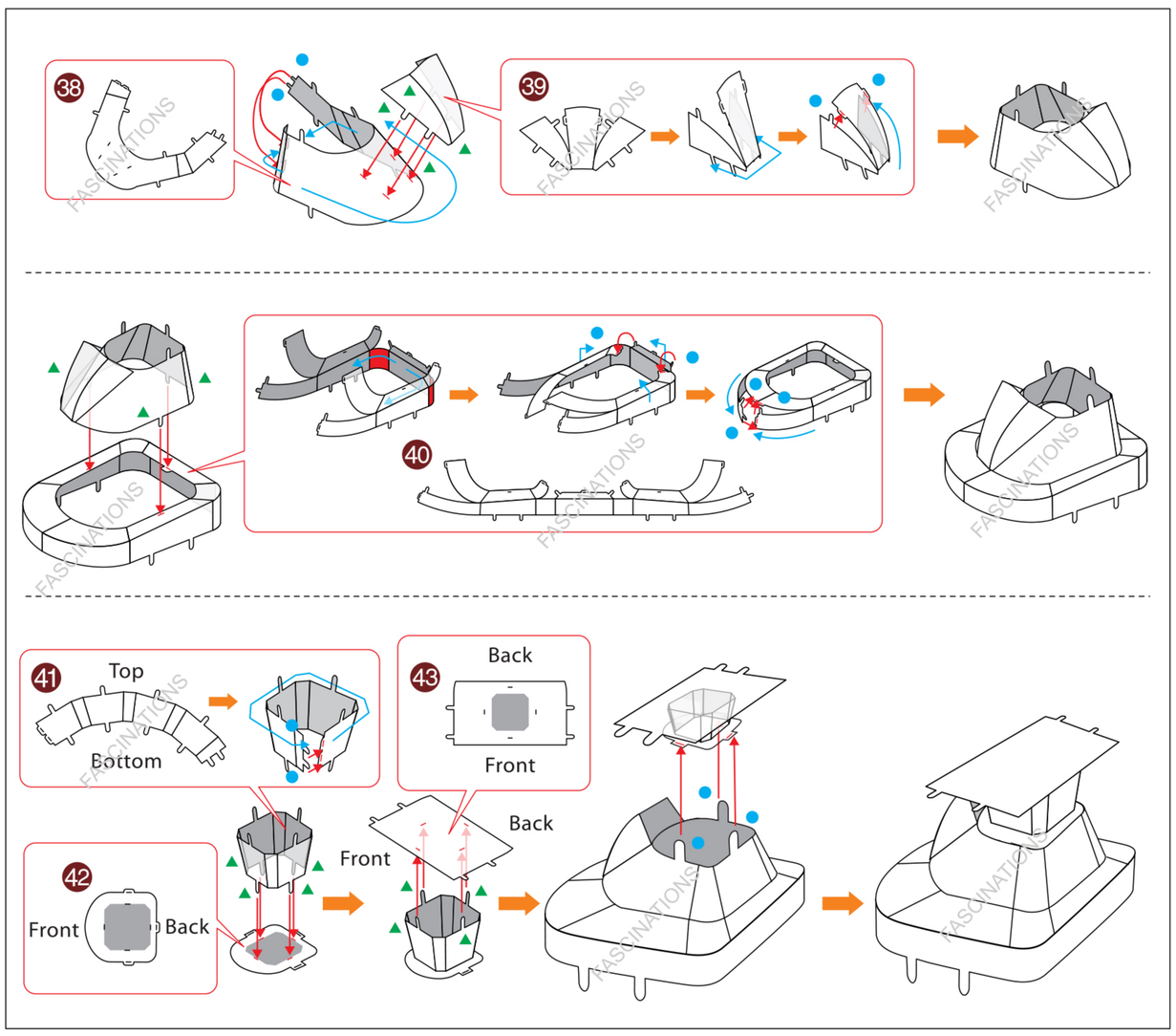
38
39
40
41
Top
Bottom
42
Front
Back
43
Back
Front
Front
Back

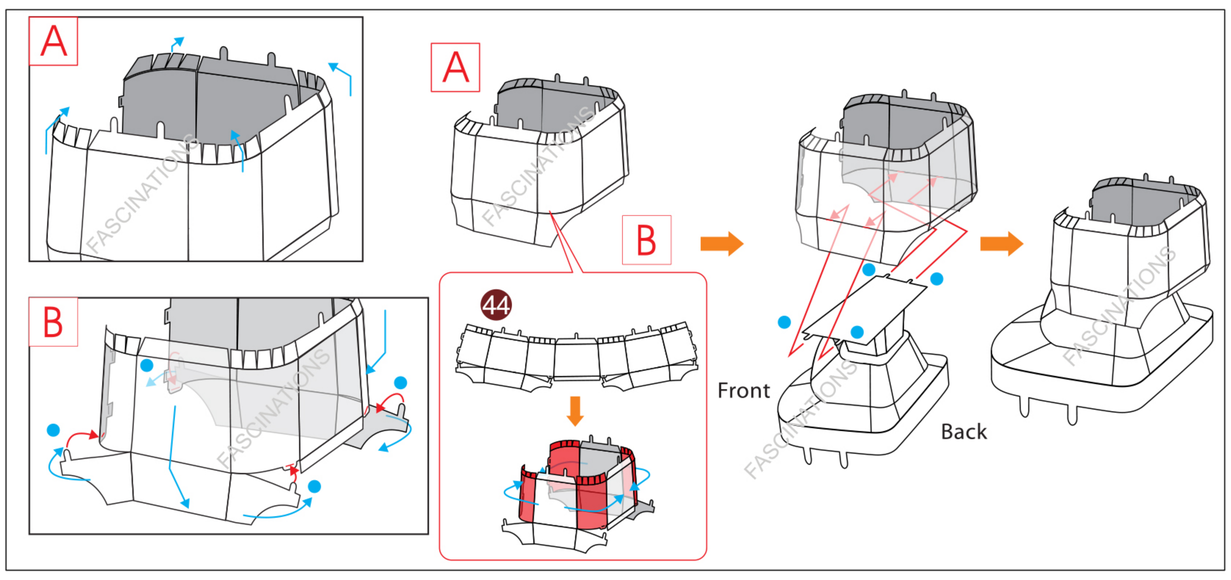
A
B
44
Front
Back

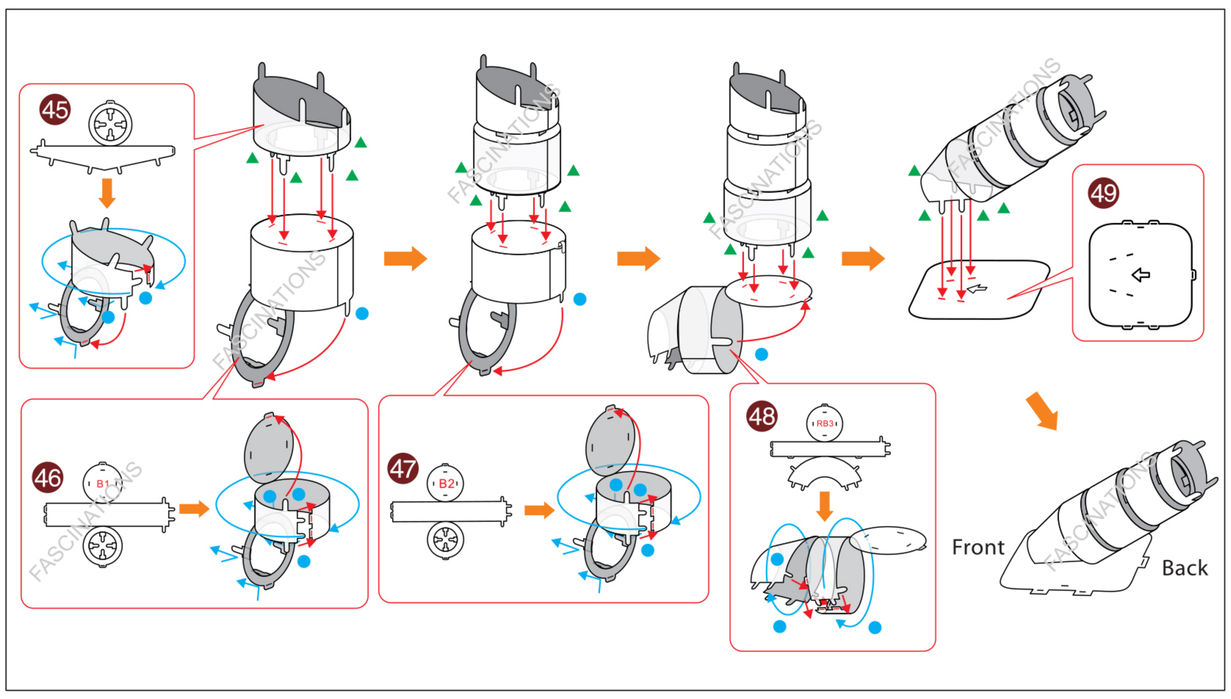
45
46
B1
47
B2
48
RB3
49
Front
Back

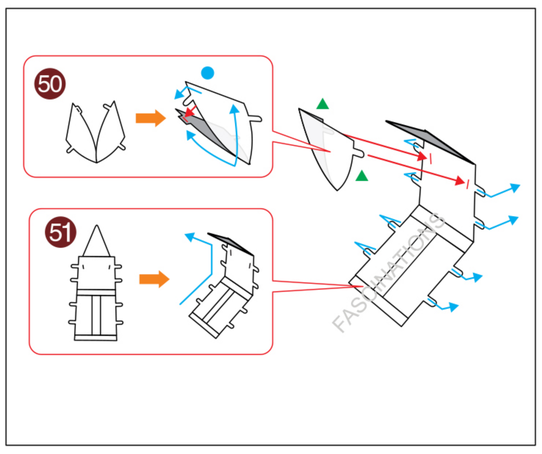
50
51

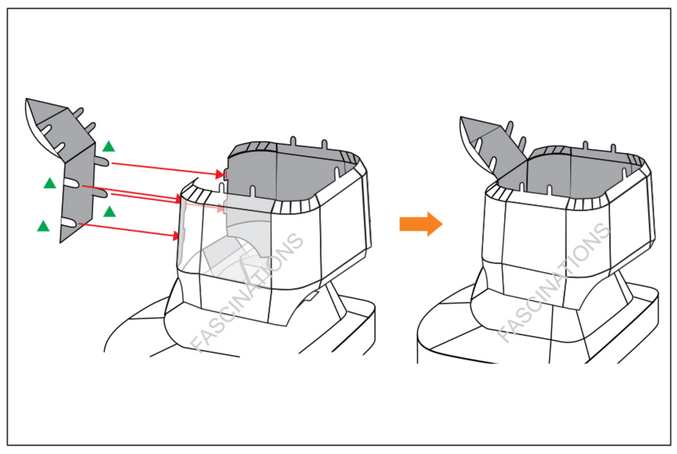

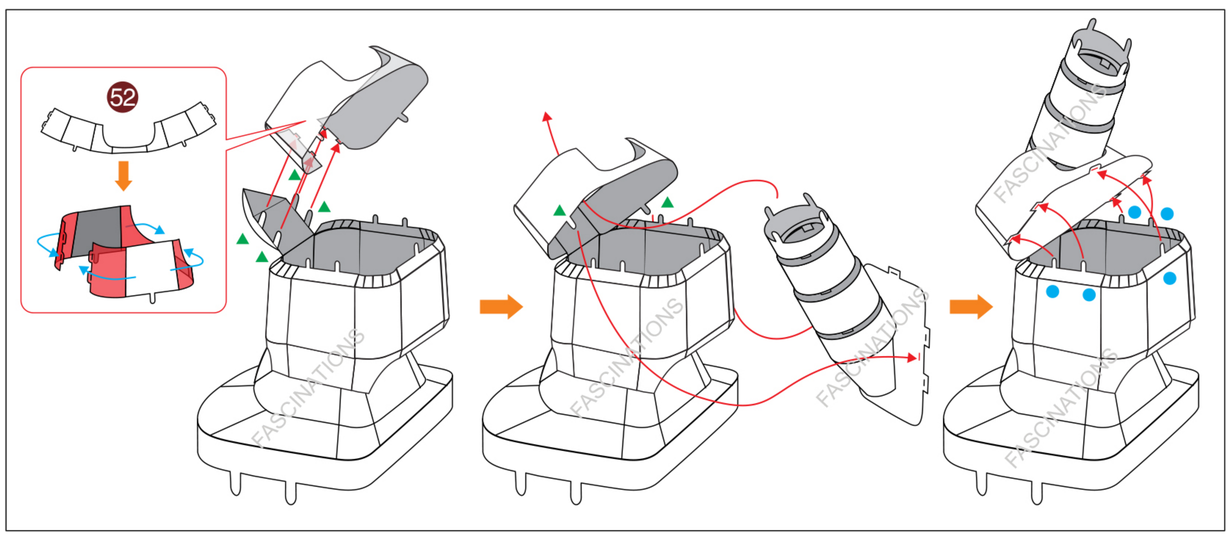
52

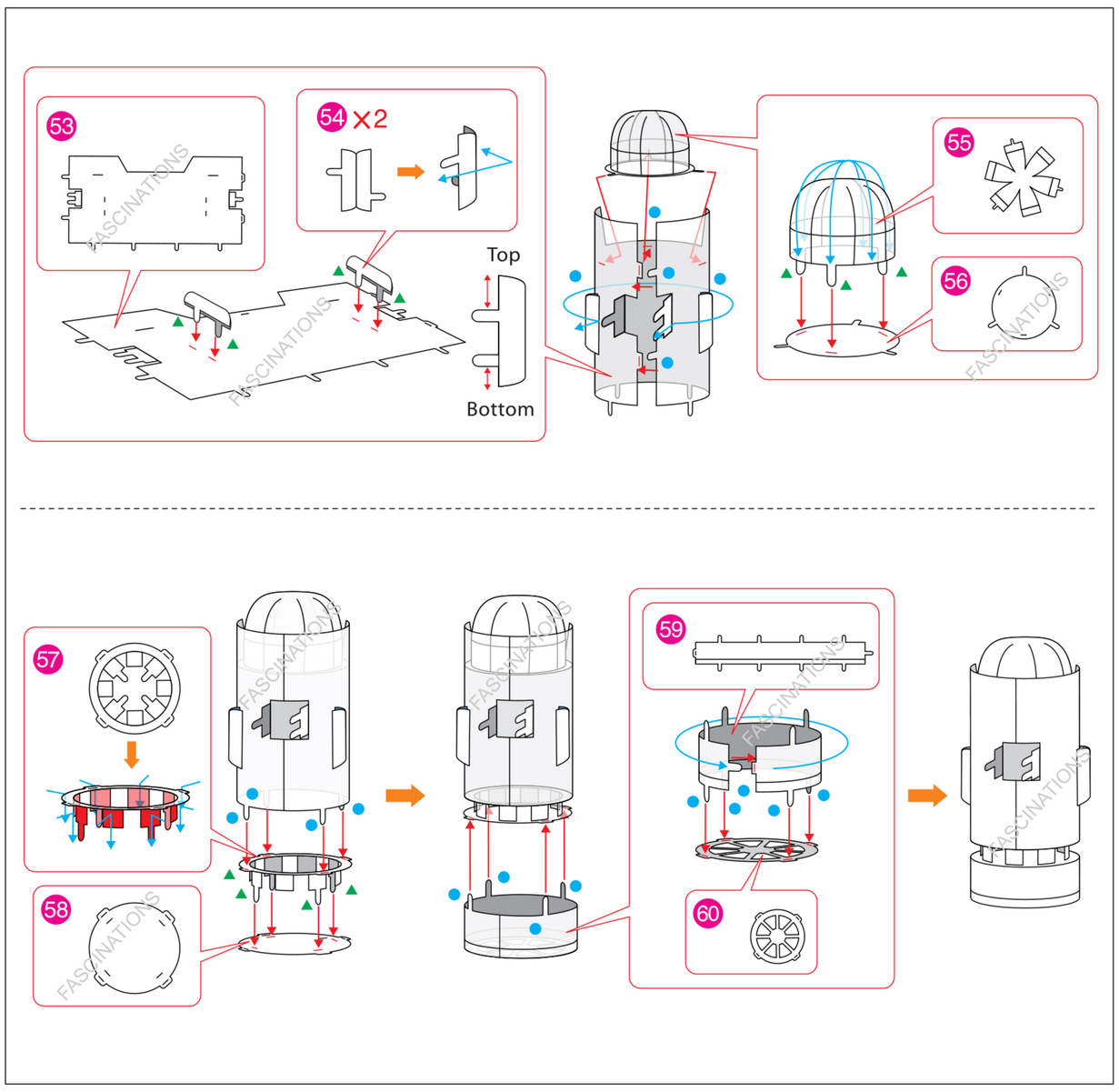
53
54 ×2
Top
Bottom
55
56
57
58
59
60

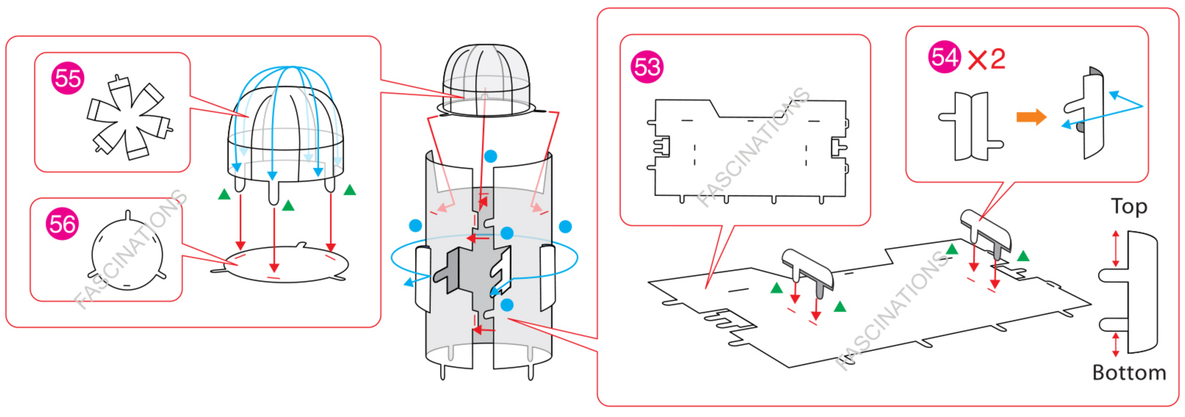

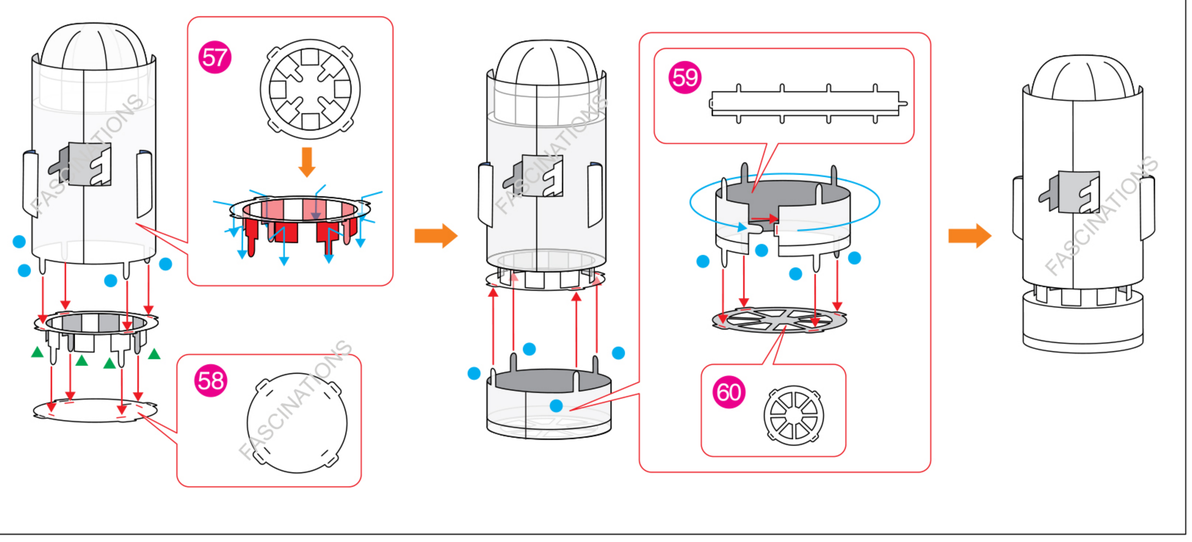

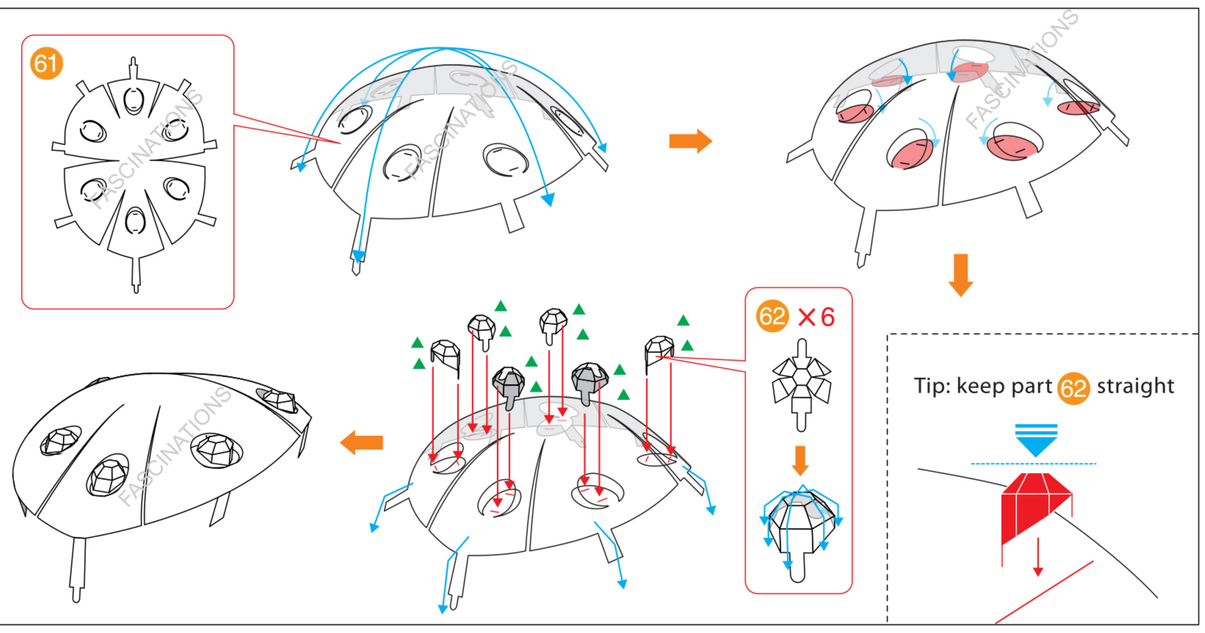

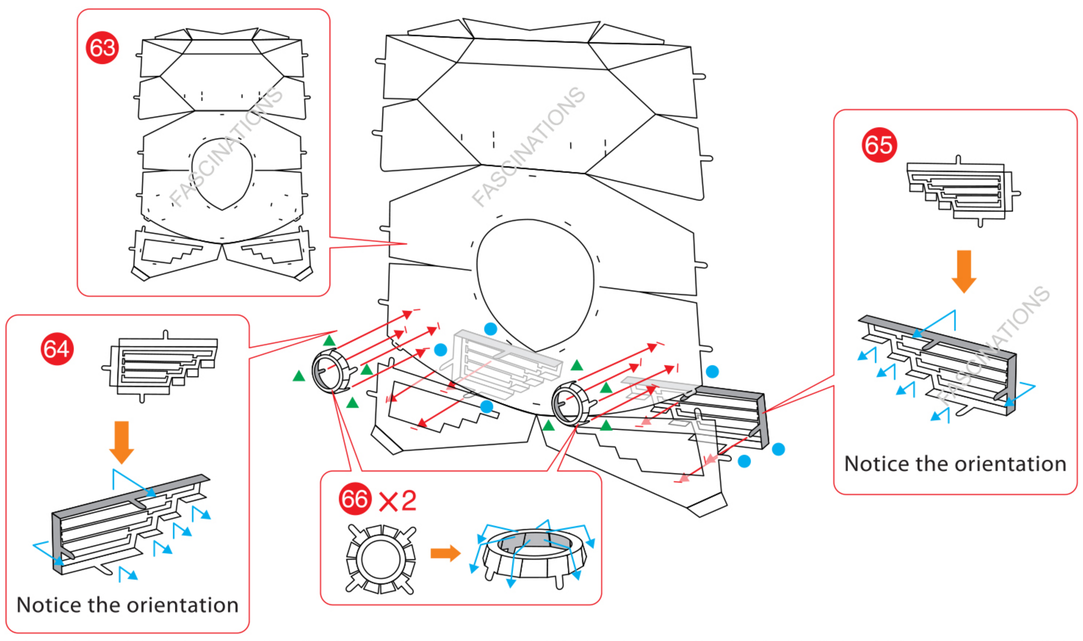

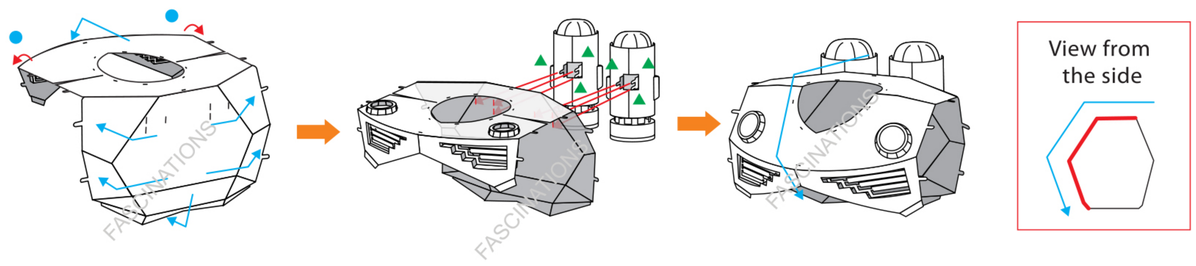

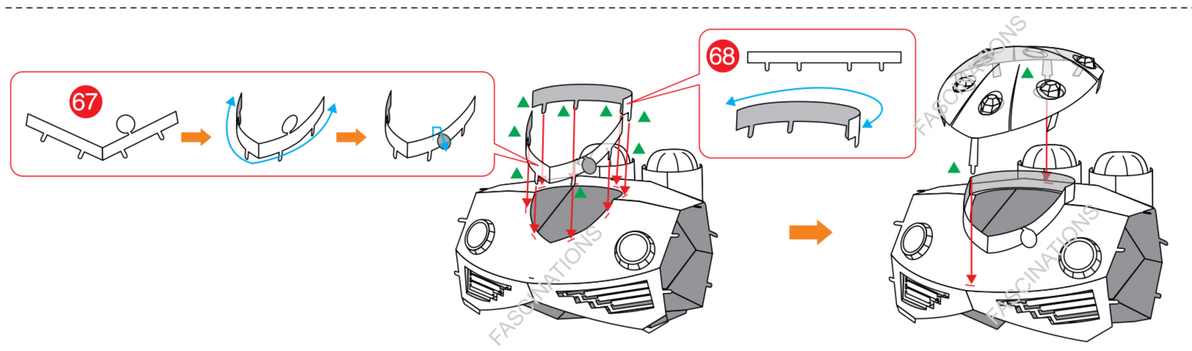

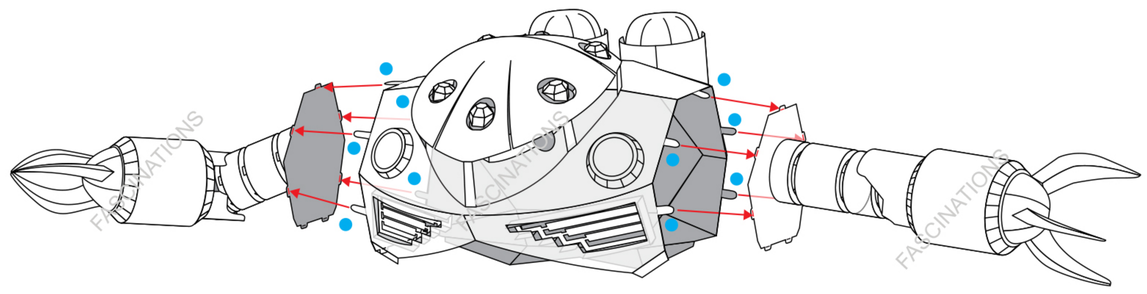

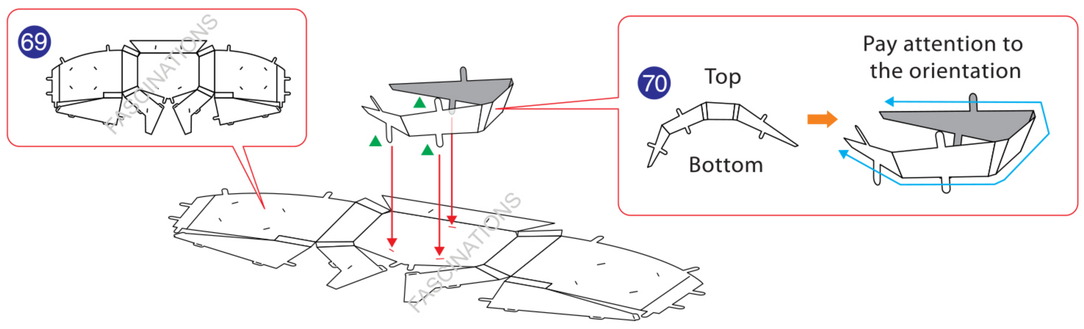

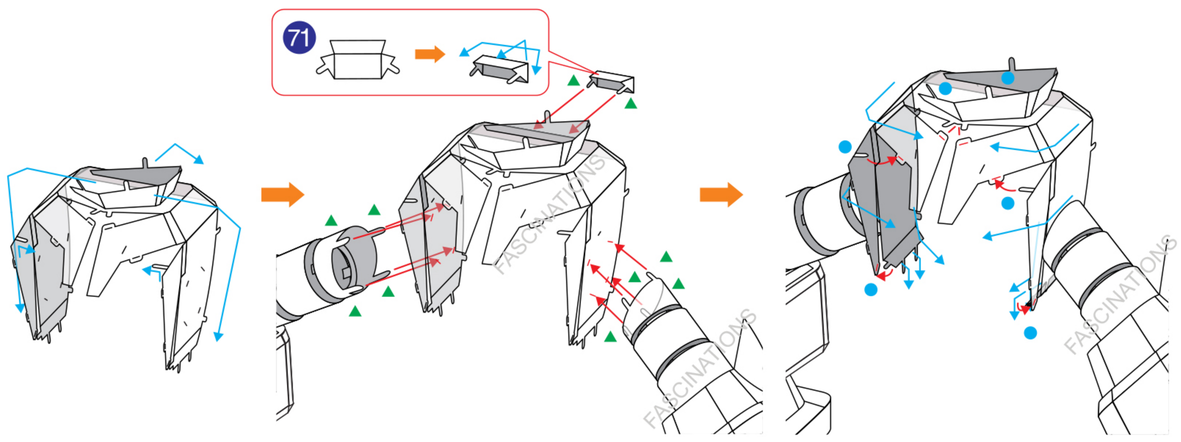

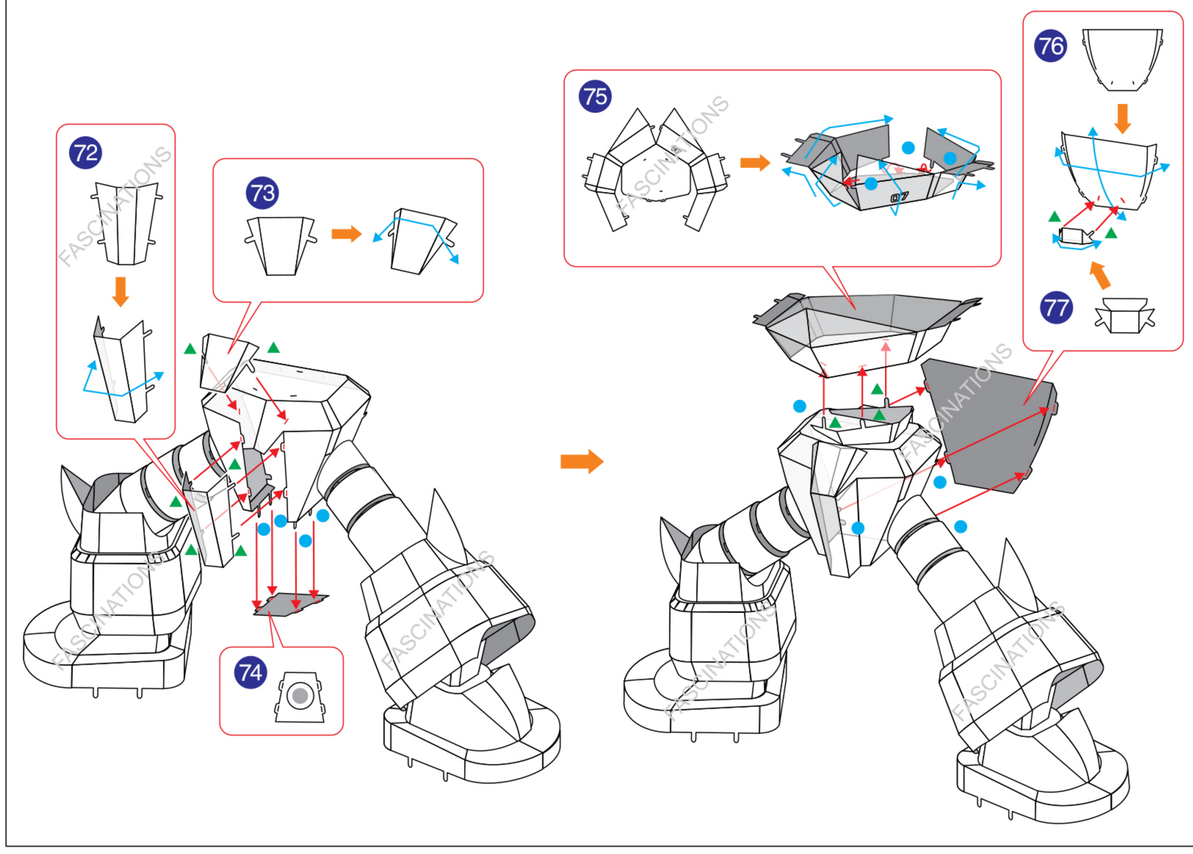

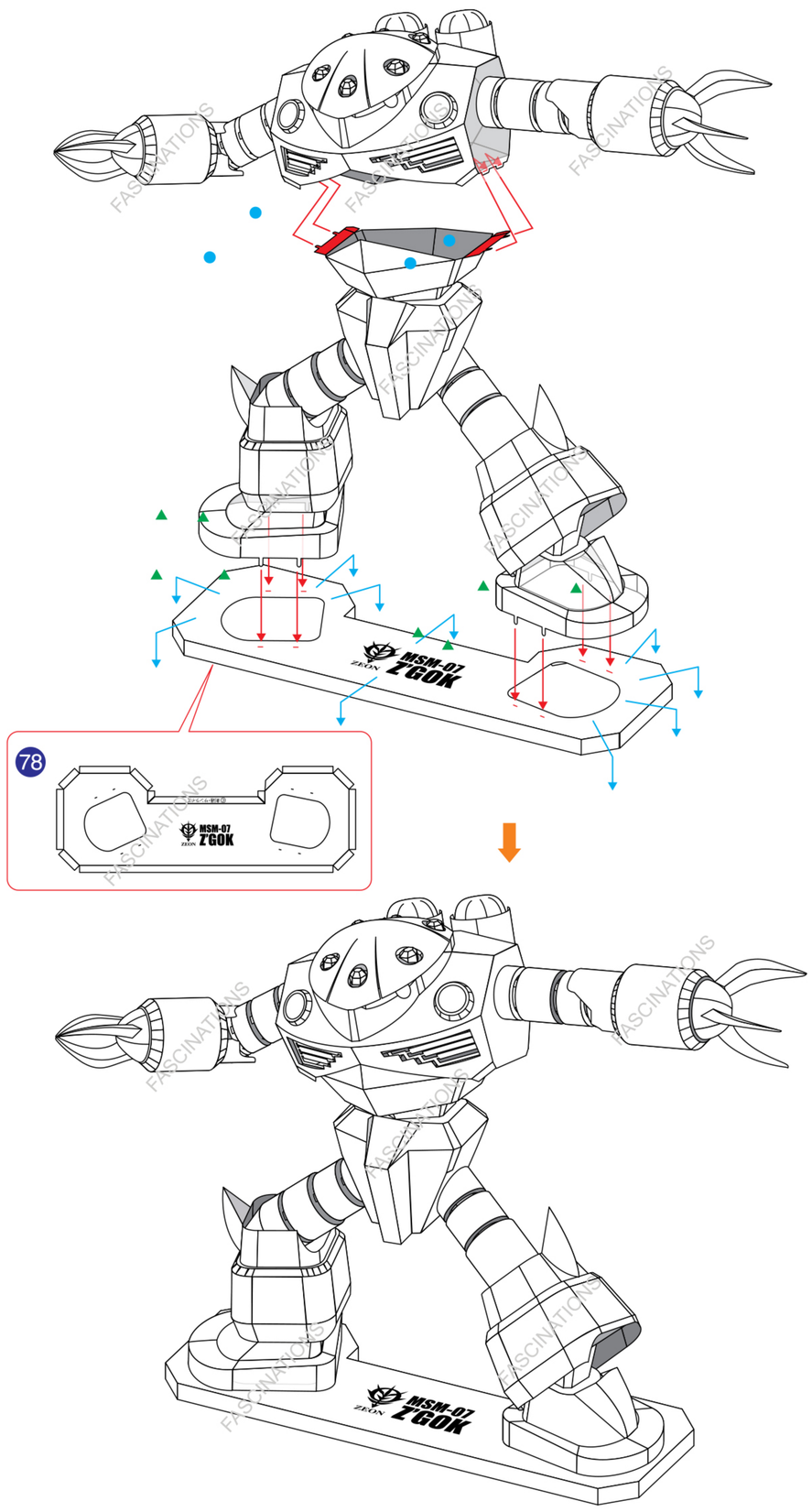

©2017 Fascinations Seattle, WA
www.metalearth.com